IGNITION TIMING

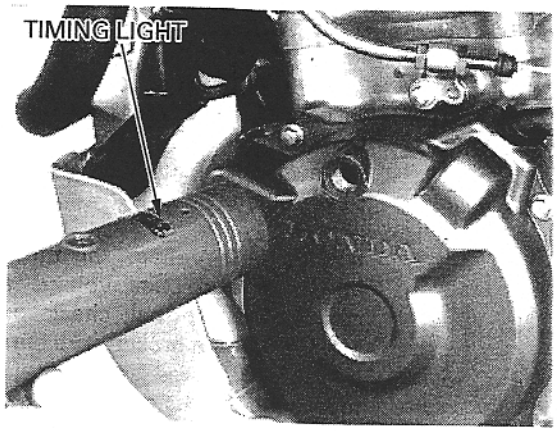

⚠WARNING

If the engine must be running to do some work, make sure the area is well ventilated. Never run the engine in an enclosed area. The exhaust contains poisonous carbon monoxide gas that may cause loss of consciousness and may lead to death.

NOTE:

The ignition timing is factory preset and need only be checked when an electrical system component is replaced.

Warm up the engine to normal operating temperature.
Stop the engine.

Remove the timing hole cap.
Attach the timing light and tachometer.

The timing is correct if the "F" mark on the flywheel aligns with the index notch on the left crankcase cover at 1,300 min^{-1} (rpm).

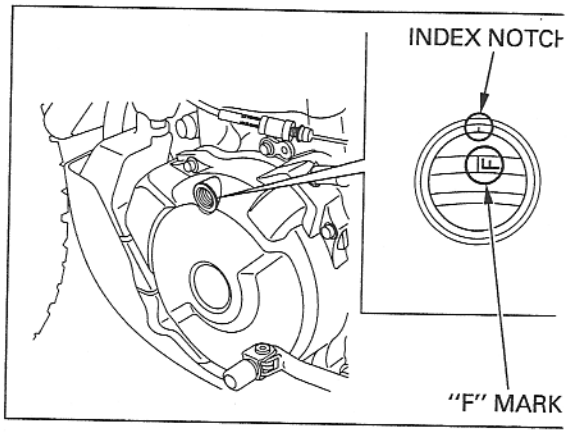

To check the advance, raise the engine speed to 3,500 min^{-1} (rpm); the index notch should be between the advance marks.

If the ignition timing is incorrect, inspect the ICM and ignition pulse generator.

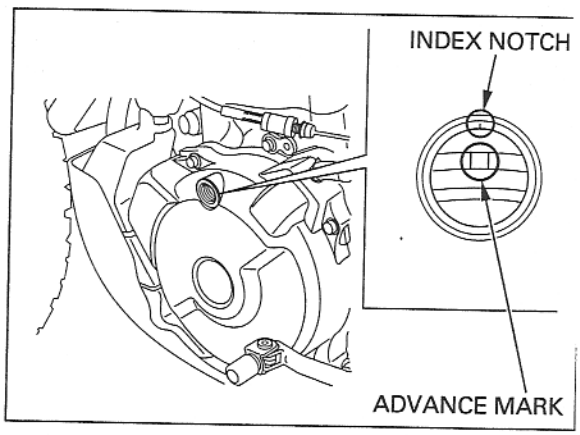

Apply grease to the timing hole cap threads.
Install the timing hole cap and tighten it to the specified torque.

TORQUE: 10 N·m (1.0 kgf·m , 7 lbf·ft)

