Install and tighten the lock nut to the specified torque.

TOOL:
Lock nut wrench 07KMA-KAB0100

TORQUE: 64 N·m (6.5 kgf·m , 47 lbf·ft)

Remove the swingarm pivot shaft.

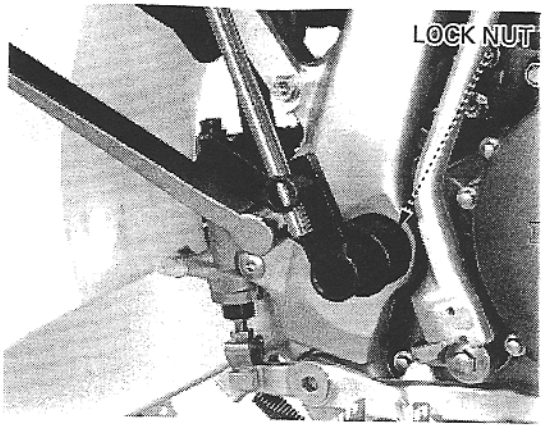

Apply thin coat of grease to the swingarm pivot bolt sliding surface.

Install the swingarm pivot bolt from the right side.

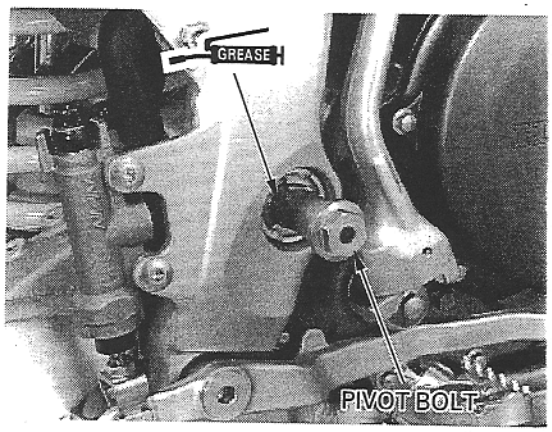

Install the washer and tighten the swingarm pivot nut to the specified torque.

TORQUE: 108 N·m (11.0 kgf·m , 80 lbf·ft)

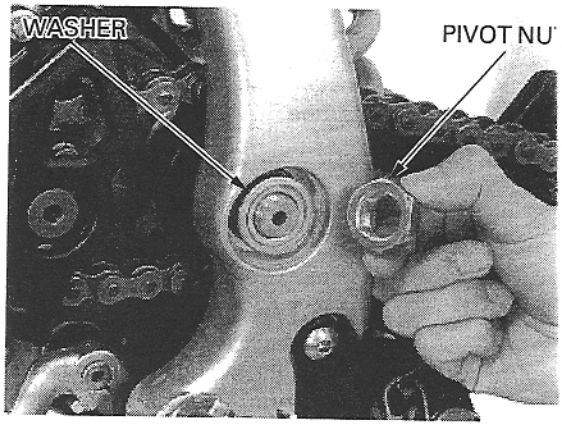

Install the drive chain guide.
Install and tighten the bolts securely.

