Remove the bladder from the chamber cap.

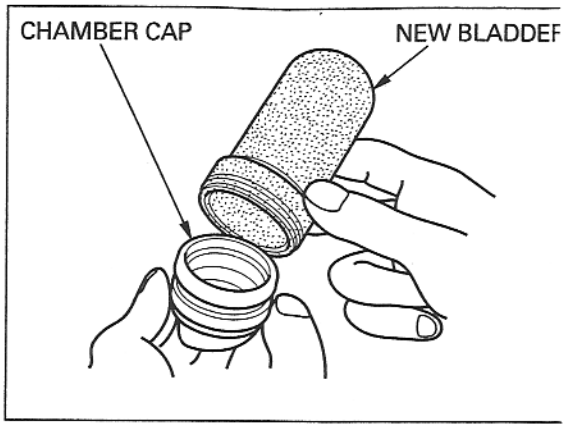

CAUTION:

Do not use any sort of tool to remove the bladder, because it may damage the chamber cap.

Attach the new bladder to the chamber cap; do not reuse the bladder.

If the bladder becomes distorted during installation, depress the valve core to reform it.

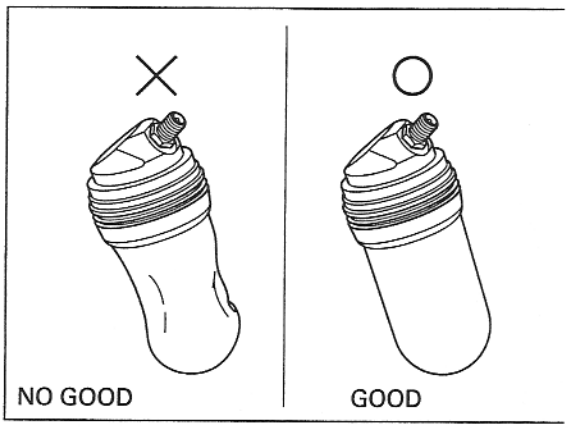

Clean the inside the reservoir and fill it with recommended shock absorber oil.

RECOMMENDED OIL: Fork fluid

Apply a light coating of shock oil to the lip of the bladder, and press the camber cap into the reservoir to about 1−2 mm (0.04−0.08 in) below the stop ring groove.

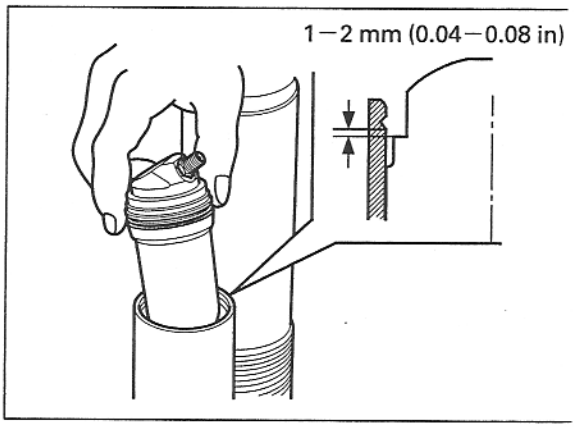

Be sure the stop ring is seated completely in the ring groove or the chamber cap can separate when riding the motorcycle.

Install the stop ring in the groove of the reservoir securely.

Temporarily fill the reservoir with air slowly until the chamber cap seats against the stop ring.

⚠WARNING

If the chamber cap does not seat fully, the chamber cap may fly out when filling the reservoir with nitrogen.

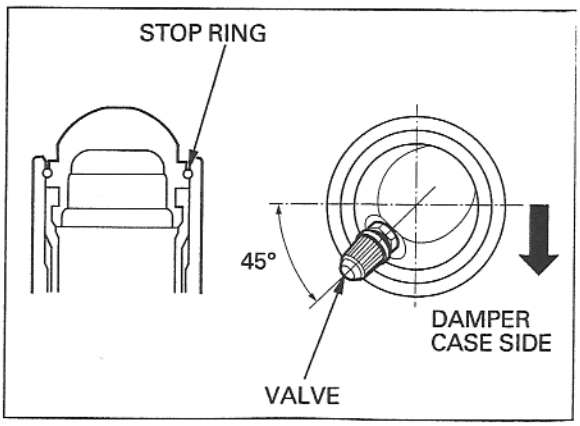

Release the air from the reservoir by depressing the valve core.
Fill the reservoir with nitrogen to the specified pressure (page 15-21).