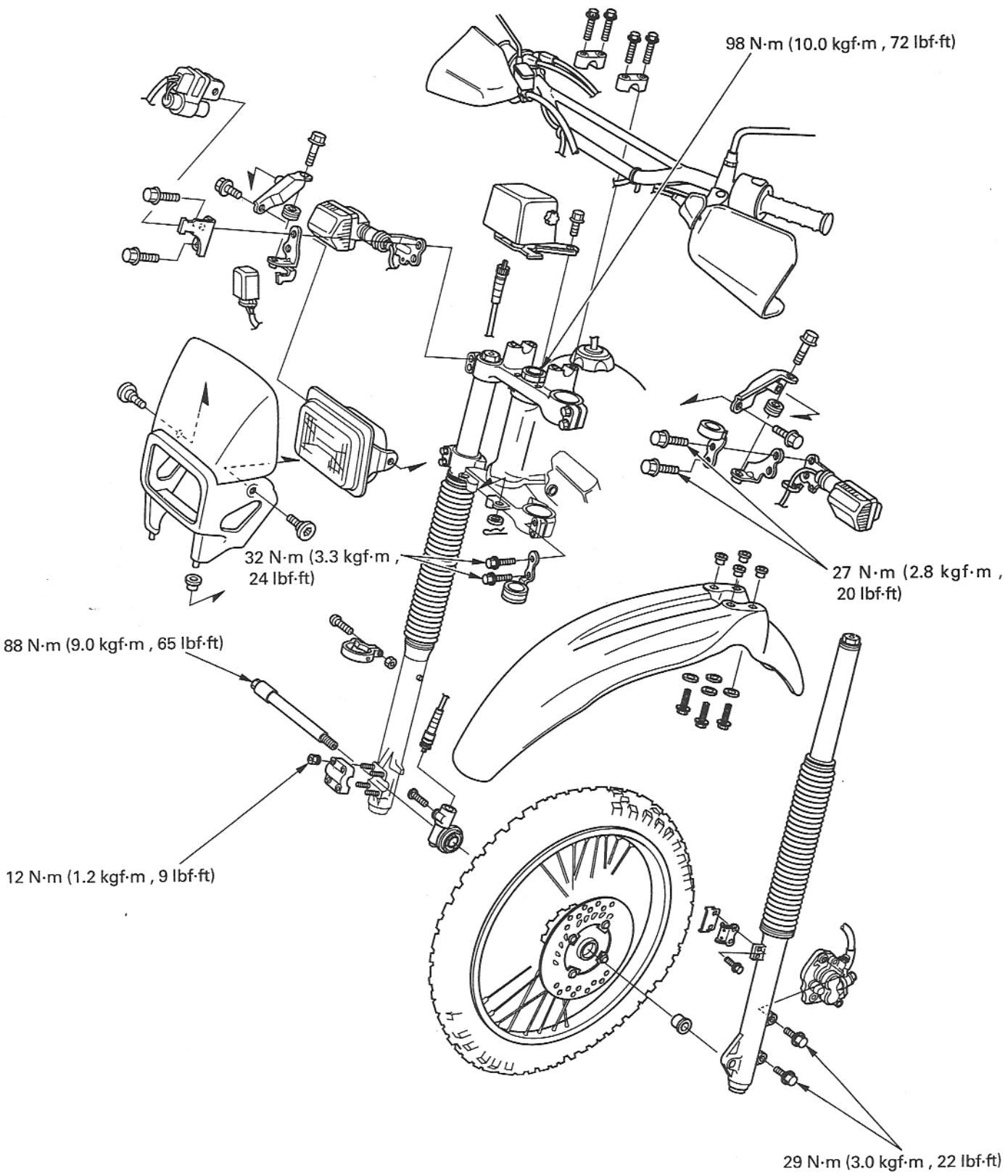
98 N·m (10.0 kgf·m , 72 lbf·ft)
32 N·m (3.3 kgf·m , 24 lbf·ft)
27 N·m (2.8 kgf·m , 20 lbf·ft)
88 N·m (9.0 kgf·m , 65 lbf·ft)
12 N·m (1.2 kgf·m , 9 lbf·ft)
29 N·m (3.0 kgf·m , 22 lbf·ft)