KICKSTARTER

REMOVAL

Remove the right crankcase cover (page 10-11).
Remove the clutch (page 10-3).

Remove the kickstarter idle gear.

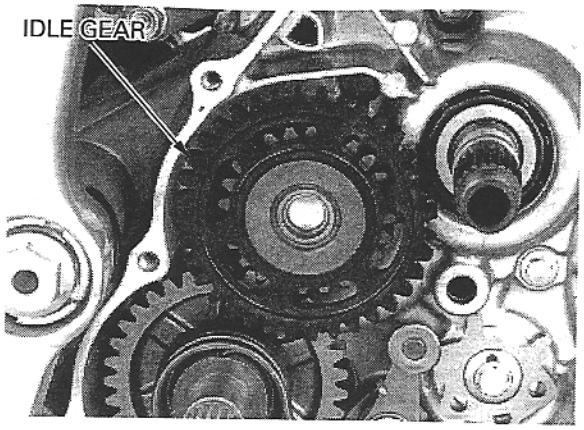

Remove the flange bushing and thrust washer.

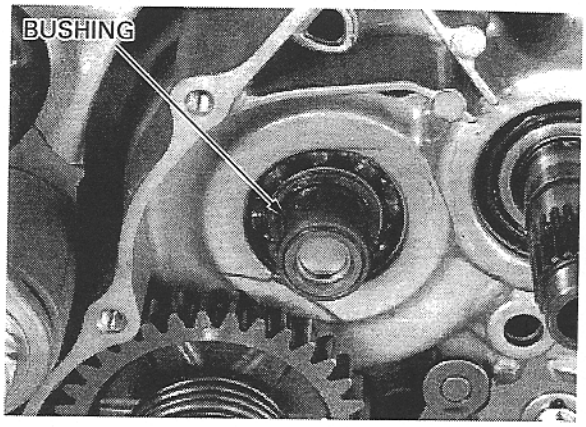

Release the hook end of the return spring from the crankcase hole; remove the kickstarter spindle assembly.

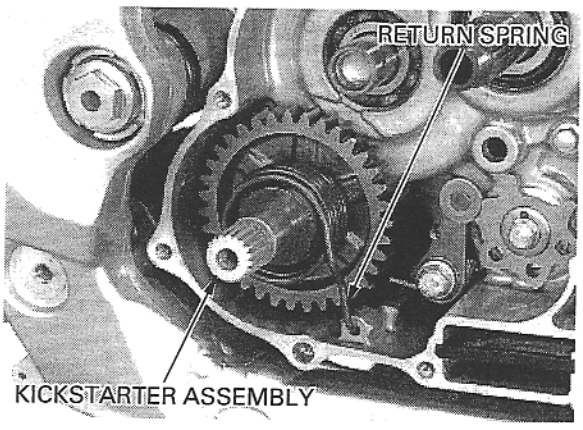

DISASSEMBLY

Remove the thrust washer, spring seat and ratchet spring from the spindle.

