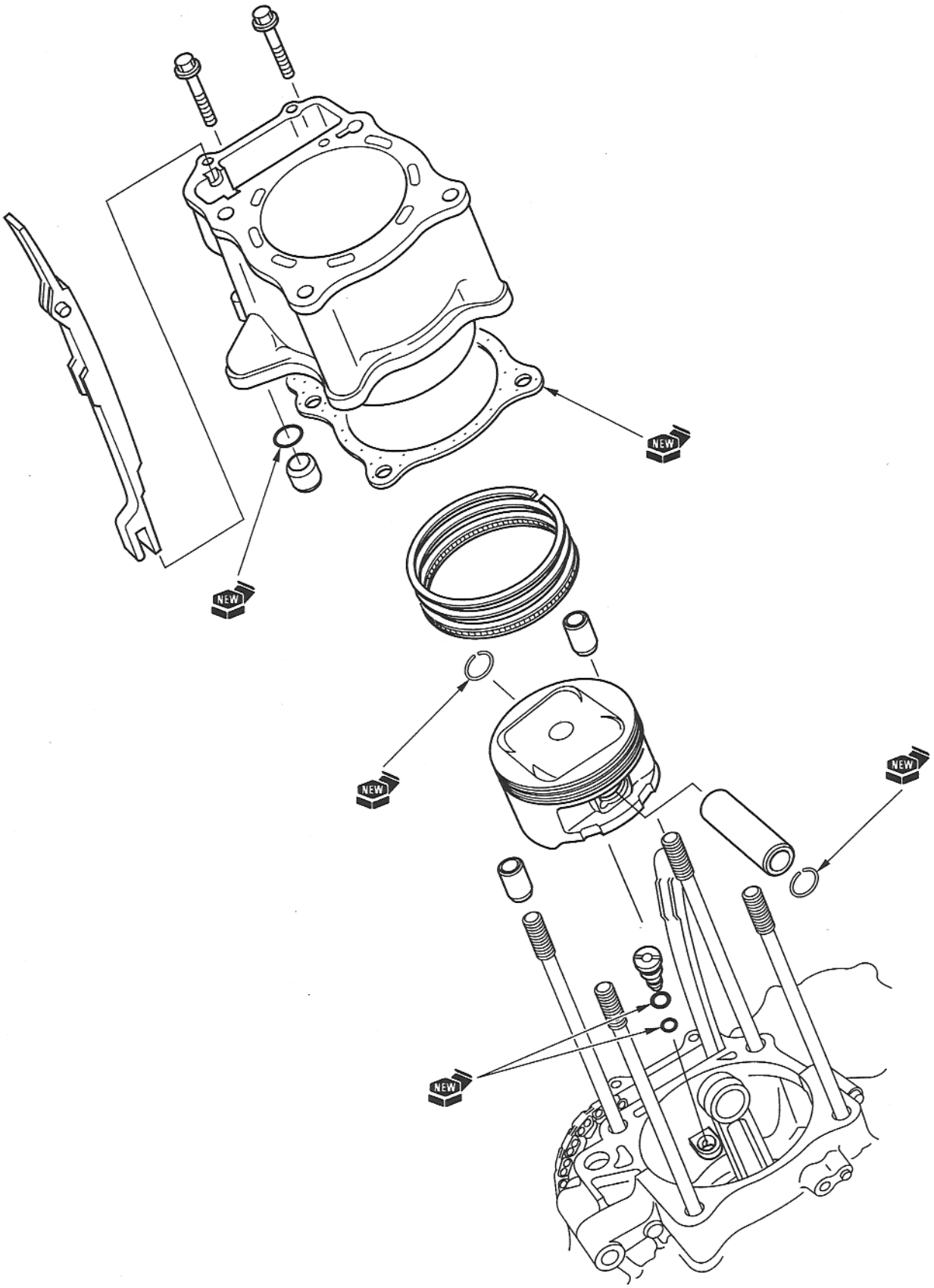
NEW
NEW
NEW
NEW
NEW