Combination Meter Disassembly/Assembly

'90–'93:

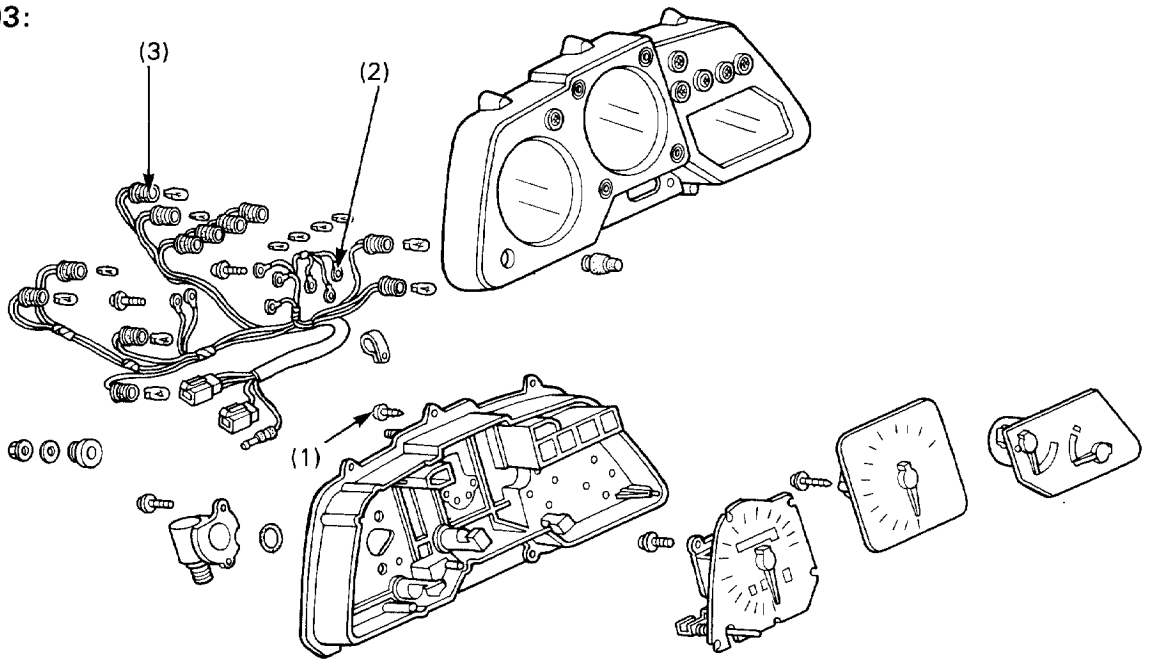

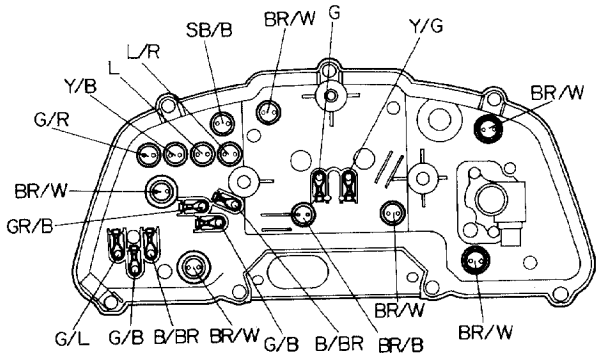

NOTE

- Connect the terminals and install the sockets according to the collor codes indicated on the back panel. The color codes (on 19-1 page) are for connection of the combination meter wire harness.

Requisite Service

- Combination meter removal/installation (page 18-9)

	Procedure	Q'ty	Remarks
	Removal Order		• Installation is in the reverse order of removal.
(1)	Wire clamp/screw	1	
(2)	Wire harness terminal	8	Remove the terminal screws and disconnect the harness connectors.
(3)	Meter bulb socket	11	Pull the sockets and bulbs out of the back panel as an assembly.