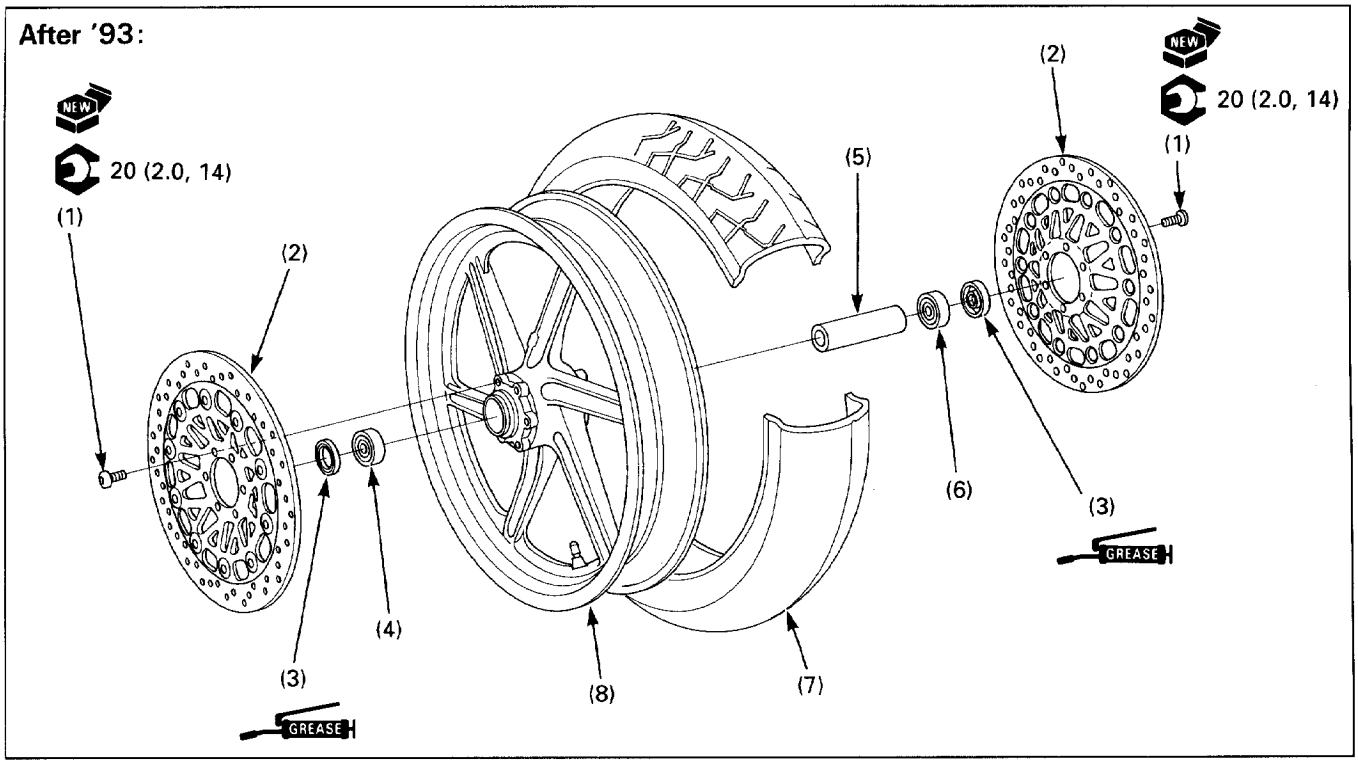

⚠WARNING

- **A contaminated brake disc or pad reduces stopping power. Discard contaminated pads and clean a contaminated disc with a high quality brake degreasing agent.**

NOTE

- Always replace wheel bearings as a set.
- For wheel bearing replacement, refer to the section 1 of the Common Service Manual.

Requisite Service

- Front wheel removal/installation (page 12-4)

	Procedure	Q'ty	Remarks
	Disassembly Order		Assembly is in the reverse order of disassembly.
(1)	Brake disc bolt	12	
(2)	Brake disc	2	NOTE • Install in the original position with the arrow mark facing out and pointing in the rotating direction.
(3)	Dust seal	2	Apply grease to the dust seal lips and install them with the lip side facing inside.
(4)	Left wheel bearing (6004 UU)	1	
(5)	Distance collar	1	
(6)	Right wheel bearing (6004 UU)	1	Drive in a new right bearing first.
(7)	Tire	1	
(8)	Front wheel	1	