Front Wheel Disassembly/Assembly

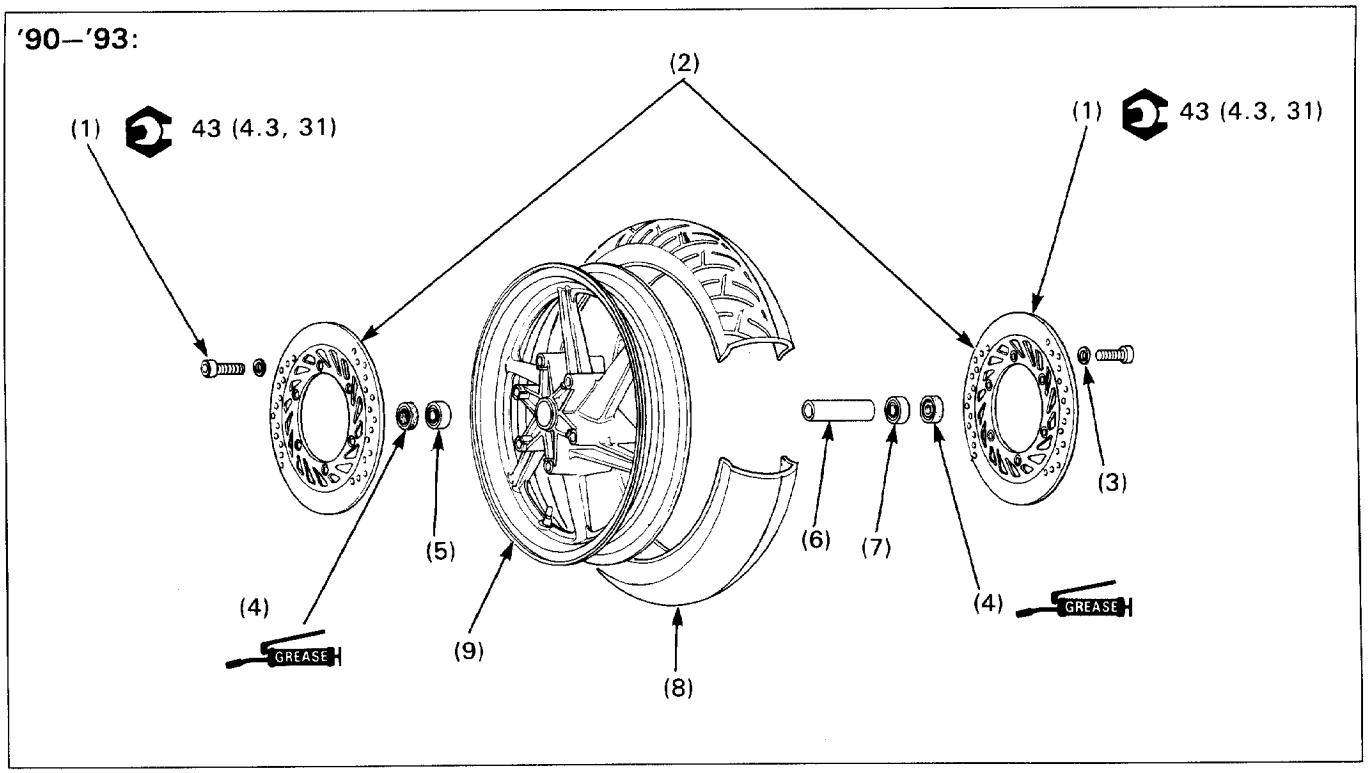

⚠ WARNING

- **A contaminated brake disc or pad reduces stopping power. Discard contaminated pads and clean a contaminated disc with a high quality brake degreasing agent.**

NOTE

- Always replace wheel bearings as a set.
- For wheel bearing replacement, refer to the section 1 of the Common Service Manual.

Requisite Service

- Front wheel removal/installation (page 12-4)

	Procedure	Q'ty	Remarks
	Disassembly Order		• Assembly is in the reverse order of disassembly.
(1)	Brake disc bolt	12	Wipe off all the grease on the bolt surface.
(2)	Brake disc	2	• Install with the stamped side outward. • Each brake disc is stamped with the identification mark "R" (for right side) or "L" (for left side). Install the brake discs correctly.
(3)	Brake disc shim	12	
(4)	Dust seal	2	Apply grease to the dust seal lips and install them with the lips facing inside.
(5)	Left wheel bearing (6004 UU)	1	
(6)	Distance collar	1	
(7)	Right wheel bearing (6004 UU)	1	NOTE: • Drive in the right side bearing first, then the left side bearing.
(8)	Tire	1	
(9)	Front wheel	1	