## OIL PUMP

### Removal

Remove R. Lower fairing ( 15-3)
Remove fuel tank ( 4-2)
Remove oil pump solenoid coupler (2P amp white) connection

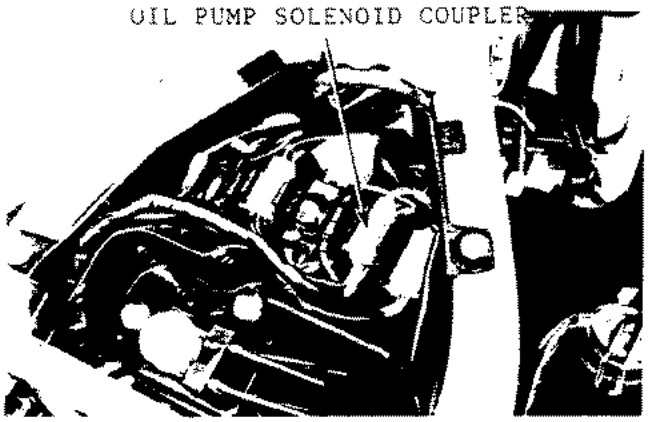


* Use tube clamp and stop oil flowing out from oil tube or oil tank

Pull oil tube from oil pump
Remove oil pump control cable from oil pump control lever
Remove the 2 oil path tubes from oil pump
Remove bolt and oil pump assembly

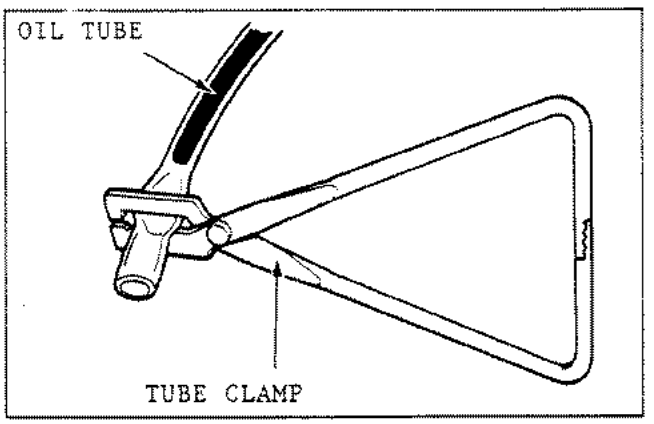


* Ensure foreign particles do not enter oil pump or tubes
* Insert plug into each oil path tube so that oil does not flow out
* Do not damage tube clip
* Check that each tubes oil pump assembly is installed

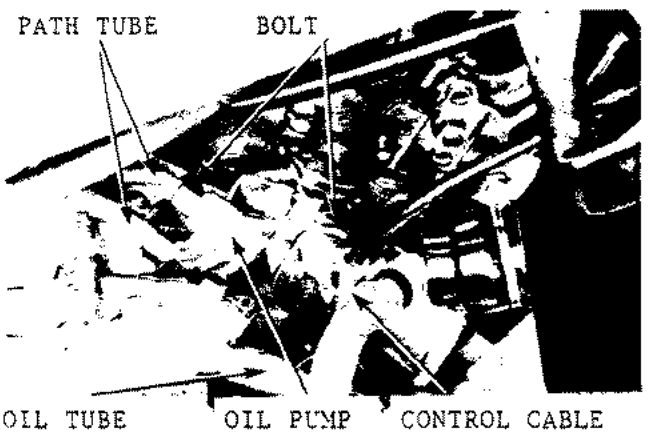


### Inspection

After removing the oil pump assembly inspect the following:

- O rings
- Oil pump drive shaft wear
- Oil pump body wear
- Oil pump control lever operation

* Do not disassemble oil pump assembly

