WIRING DIAGRAMS
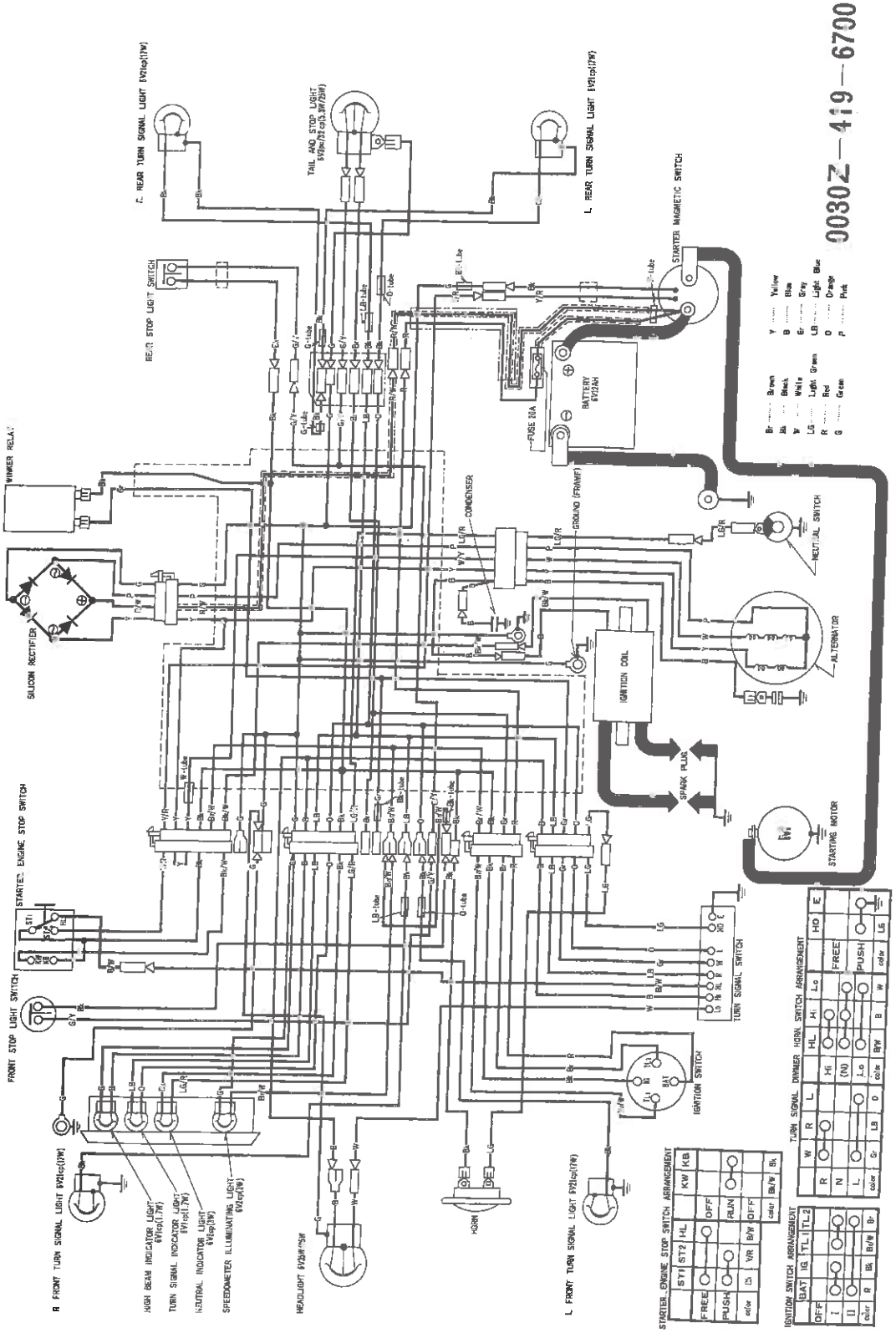
CANADIAN TYPE