F 7

F-2

Meter • Key set

Compteurs • Jeu de clés

Messer • Schloßsatz

Medidor • Juego de llaves

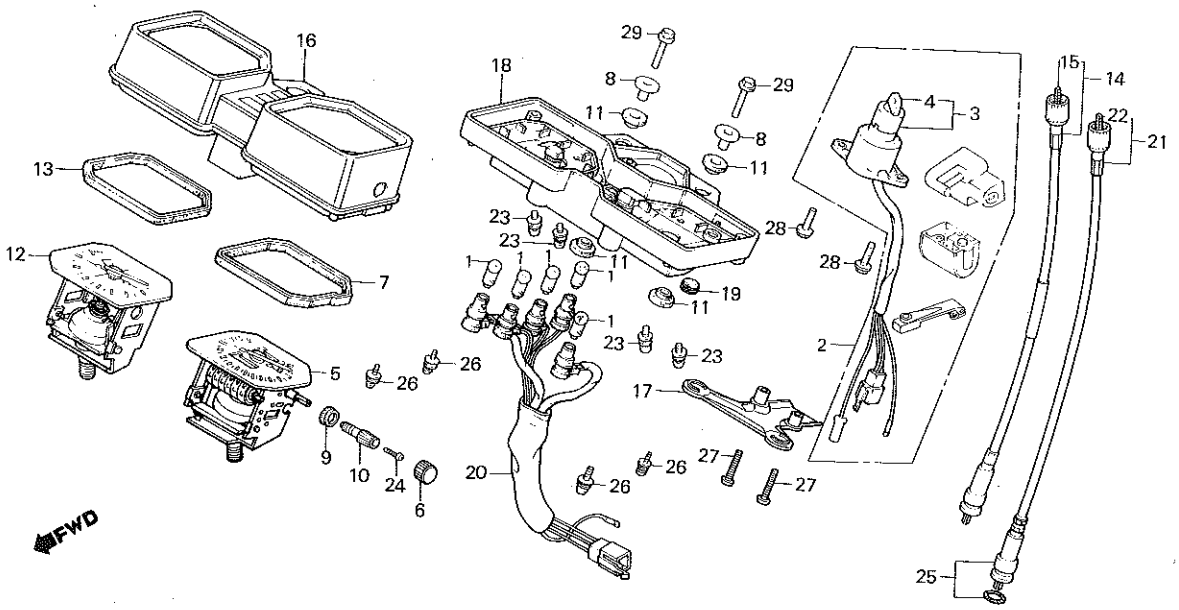

BMC8-18

Service item	F.R.T.	Ref. No.	Part No.	Description	Reqd. No. FT500 c	Serial No.	Area code
		8	37206-471-000	COLLAR, METER SETTING	2		
		9	37207-471-008	GROMMET, TRIP	1		
		10	37220-471-008	KNOB, TRIP	1		
		11	37242-471-000	RUBBER, METER MOUNTING	4		
		12	37250-MC8-601	TACHOMETER ASSY. (1/MIN)	1		E,ED,F,SA,SD,SW,1G,2G
			37250-MC8-671	TACHOMETER ASSY. (RPM)	1		CM,U
		13	37253-471-008	PACKING, TACHOMETER	1		
		14	37260-MC8-000	CABLE ASSY., TACHOMETER	1		
		15	37261-MC8-000	CABLE, TACHOMETER INNER	1		
		16	37610-MC8-008	CASE, METER UPPER	1		
		17	37616-MC8-008	COVER, CORD	1		
		18	37617-KC4-008	CASE, METER LOWER	1	Non +	
		19	37618-471-601	GROMMET	1		
		20	37619-MC8-000	CORD ASSY.	1		
		21	44830-MC8-000	CABLE ASSY., SPEEDOMETER	1		