F 6

F-2

Meter • Key set

Compteurs • Jeu de clés

Messer • Schloßsatz

Medidor • Juego de llaves

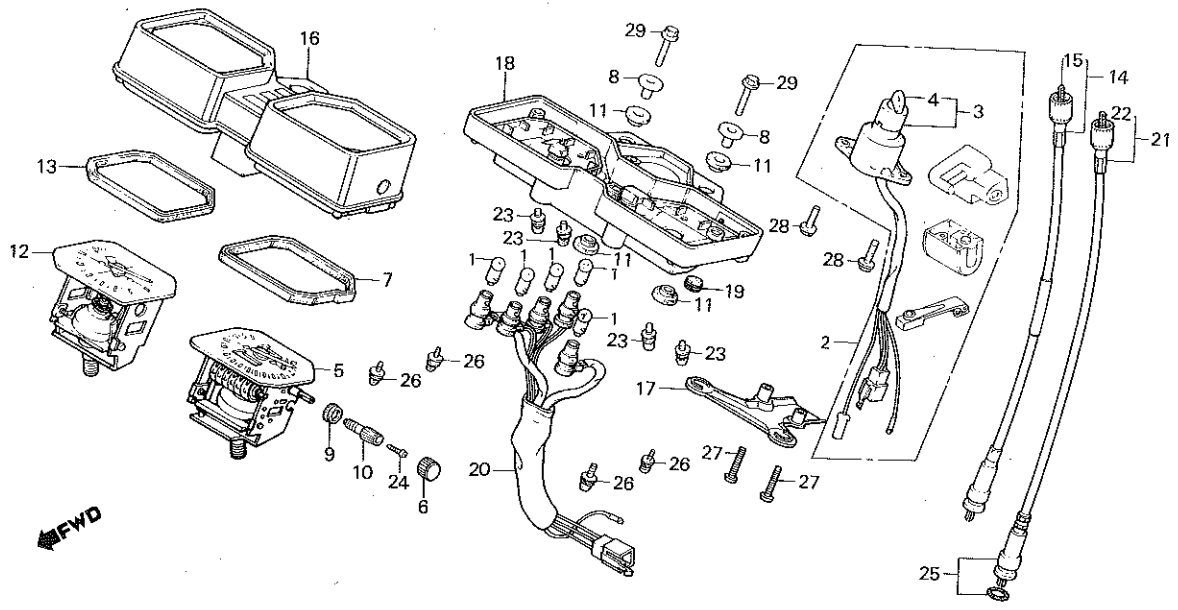

BMC8–18

Service item	F.R.T.
CABLE ASSY., TACHOMETER	0.1
•CABLE ASSY., SPEEDOMETER	
SWITCH ASSY., COMBINATION	0.3
•TACHOMETER ASSY.	
•CASE, METER UPPER	
•CORD ASSY.	
SPEEDOMETER ASSY.	0.4
•CASE, METER LOWER	
KEY SET	0.6

Ref. No.	Part No.	Description	Reqd. No. FT500 C	Serial No.	Area code
1	34908-GA7-701 ●	BULB, WEDGE BASE (12V3.4W)	5		
2	35010-471-850 ●	KEY SET	1		E,ED,F,SD,SW,1G,2G
	35010-471-900	KEY SET	1		CM,SA,U
3	35100-473-007 ●	SWITCH ASSY., COMBINATION (HONDA LOCK)	1		
4	35121-402-811 ●	KEY, BLANK (TYPE 1) (NO.*01 THROUGH *20)	(1)		
	35122-402-811 ●	KEY, BLANK (TYPE 2) (NO.*21 THROUGH *40)	(1)		
5	37200-MC8-601	SPEEDOMETER ASSY. (MPH/KPH)	1		E
	37200-MC8-611 ●	SPEEDOMETER ASSY. (KPH)	1		ED,F,SA,SD,SW,U,1G,2G
	37200-MC8-721	SPEEDOMETER ASSY. (KPH/MPH)	1		CM
6	37202-371-610	CAP, TRIP METER KNOB	1		1G,2G
7	37203-471-008 ●	PACKING, SPEEDOMETER	1		