Block No.

F-13 (2ED)

Fuel tank

Fuel pump

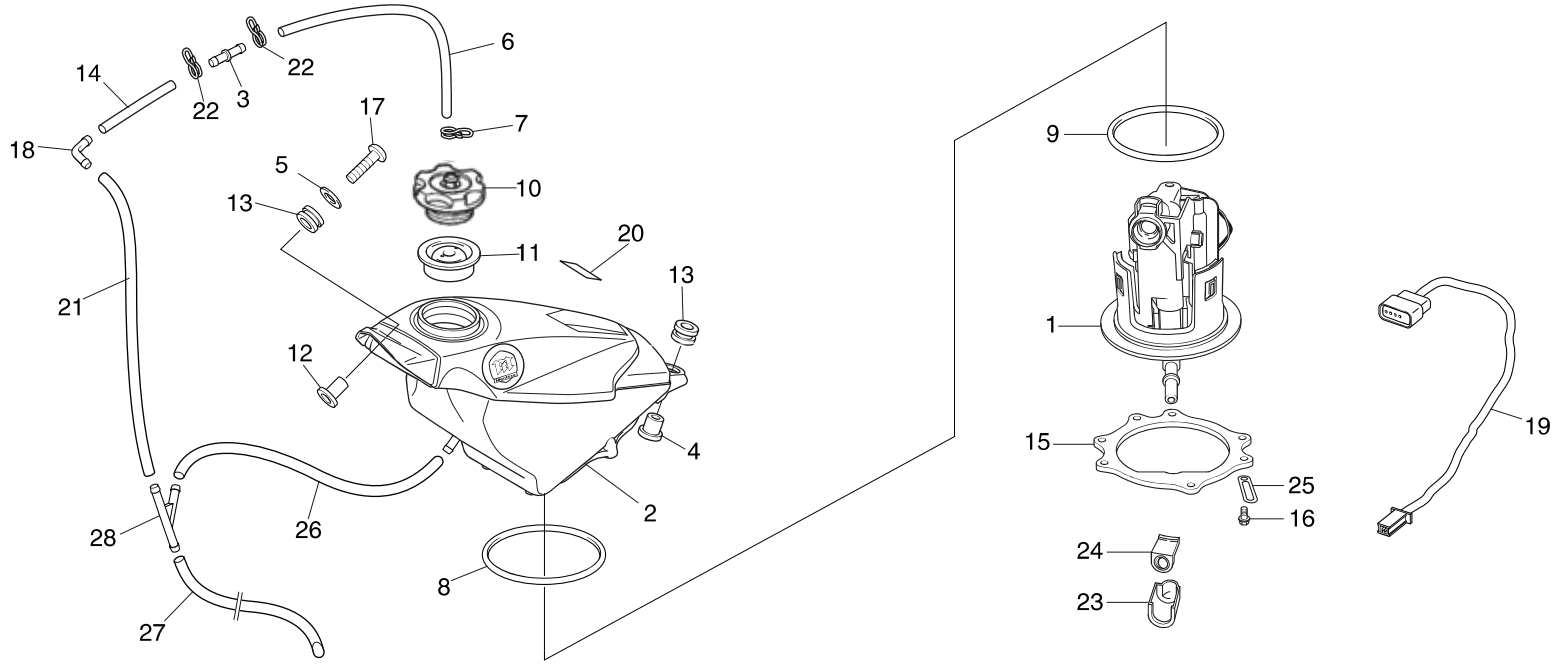

Ref.No.	Part No.	Description	Qty. '18
1	16700-NX7-003	UNIT ASSY., FUEL PUMP	1
2	17500-NN4-Z60	SET, FUEL TANK ((WITH DECALS)	1
3	17625-NF4-003	VALVE	1
4	17509-NN4-000	COLLAR, TANK SET	1
5	90501-NN4-G00	WASHER 6 MM	1
6	17523-NN4-G00	TUBE, FUEL CAP BREATHER	1
7	95002-02129	CLIP B12	1
8	16712-MEN -A30	O-RING 2,4X88,4	1
9	16711-MEN-A30	O-RING 3,7X73,9	1
10	17621-NN4-M10	FUEL CAP	1
11	17624-NN4-M10	PACKING, FUEL CAP	1
12	61104-357-000	COLLAR, FR FENDER	1
13	64615-KR1-860	RUBBER, LWR COWL MOUNT	2
14	95005-55035-20	TUBE 5,3 x 35	1
15	17519-NN4-L10	PLATE,FUEL PUMP	1
16	90106-KRN-000	BOLT,FLANGE 5X12	7
17	90115-NN4-000	BOLT, SPL, 6X27	1
18	19114-NN4-600	JOINT 2 WAY	1
19	32103-NN4-L10	SUB HARNESS FUEL PUMP	1
20	87586-MKF-D40	LABEL, E10/95+ FUEL	1
	87586-NN4-N10	LABEL, E5/E10/95+ FUEL	1
21	17521-NN4-M10	DRAIN TUBE A	1
22	95002-02100	CLIP B10	2
23	17575-MEN -A30	COVER, FUEL CONNECTOR	1
24	17576-MEN -A30	RUBBER, FUEL CONNECTOR	1
25	90106-KJ6-740	CLIP TUBE	1
26	17524-NN4-M10	DRAIN TUBE B	1
27	17522-NN4-M10	DRAIN TUBE C	1
28	16180-ML6-671	3 WAY JOINT	1