Block No.

E-11

Crankcase

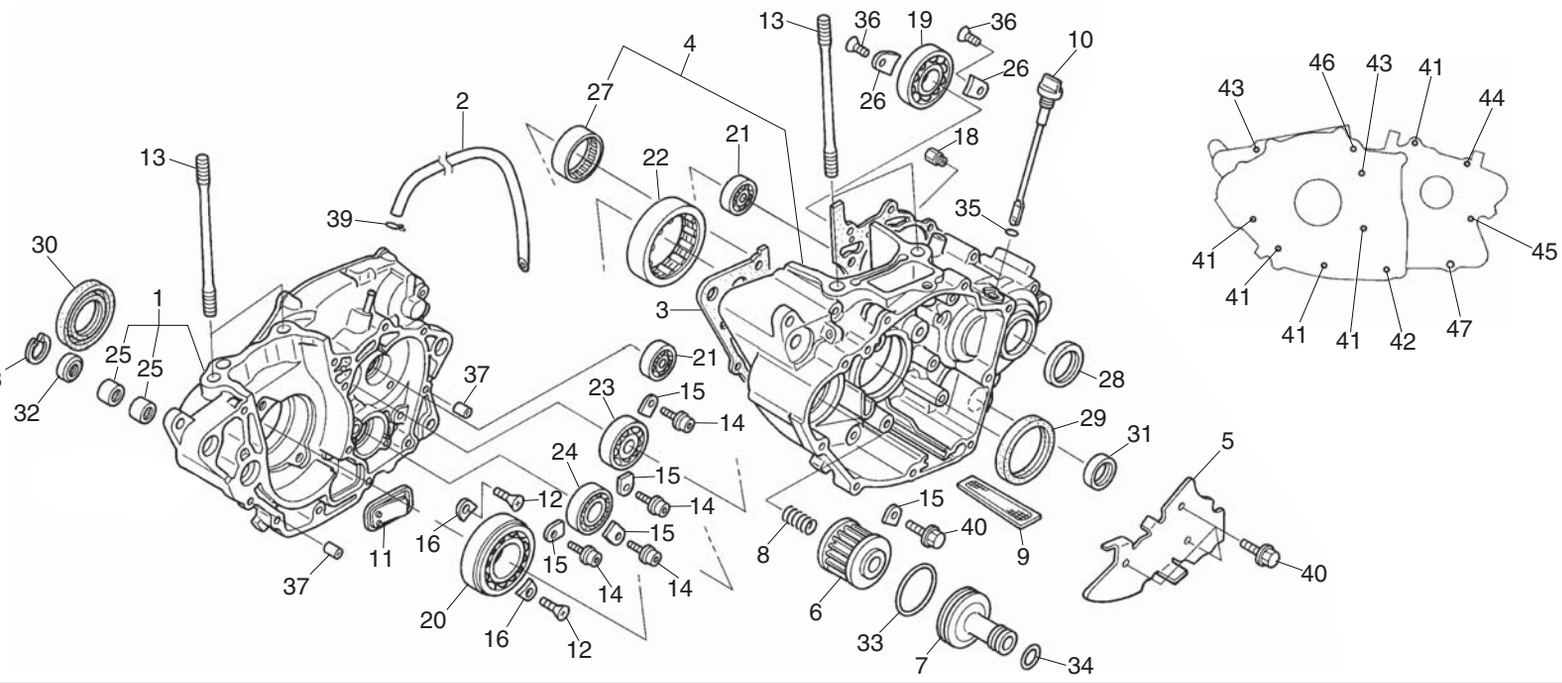

Ref.No.	Part No.	Description	Qty. '15
31	91203-KA4-771	OIL SEAL, 14X22X5	1
32	91204-HB3-004	OIL SEAL, 9X18X5	1
33	91302-PA9-003	O-RING, 39.8X2.2	1
34	91303-HA0-003	O-RING, 11X1.9	1
35	91316-MJ8-003	O-RING, 8.4X2.4	1
36	93600-06010-0H	SCREW, FLAT 6X10	2
37	94301-08140	DOWEL PIN, 8X14	2
38	94520-19000	CIRCLIP, IN, 19	1
39	95002-02100	CLIP B10, TUBE	1
40	96001-06014-00	BOLT, FLANGE, 6X14	4
41	96001-06045-00	BOLT, FLANGE, 6X45	5
42	96001-06055-00	BOLT, FLANGE, 6X55	1
43	96001-06070-00	BOLT, FLANGE, 6X70	2
44	96001-06075-00	BOLT, FLANGE, 6X75	1
45	96001-06080-00	BOLT, FLANGE, 6X80	1

Ref.No.	Part No.	Description	Qty. '15
46	96001-06085-00	BOLT, FLANGE, 6X85	1
47	96300-08070-00	BOLT, FLANGE, DR, 8X70	1