CYLINDER HEAD

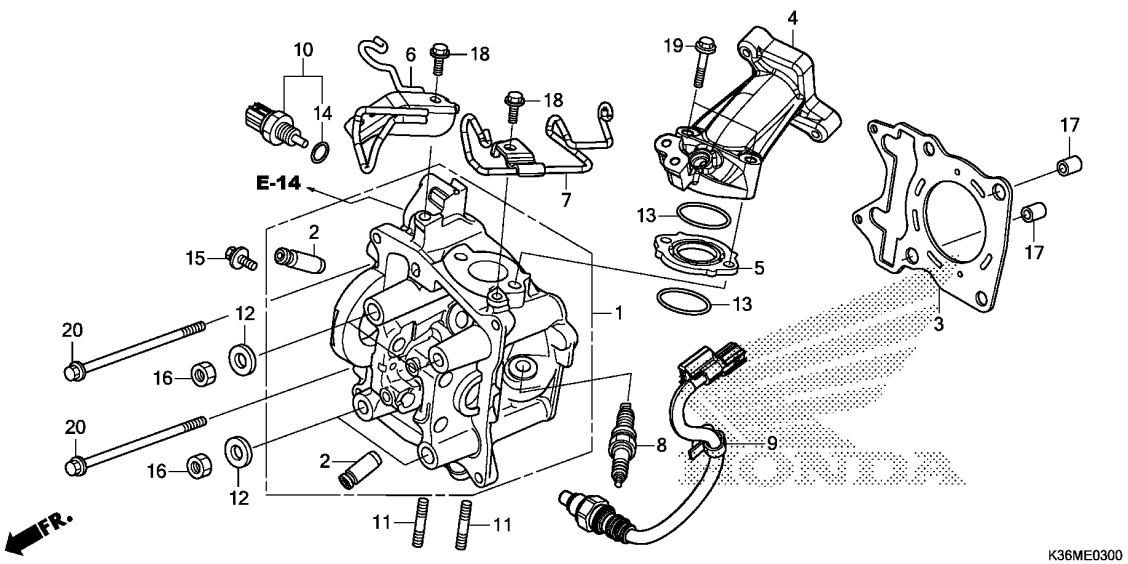

Ref. No.	L.O.N.	(Relative ref. Number) Description	F.R.T.
1	111106	HEAD, CYLINDER ····· .INCLUDES: Engine removal and installation .INCLUDES: Valve adjust and reface	5.1
2	1111L9	GUIDE, INTAKE VALVE(ONE) ····· .INCLUDES: Engine removal and installation .INCLUDES: Reaming .INCLUDES: Valve adjust and reface	5.1
	1111M0	GUIDE, EXHAUST VALVE(ONE) ···· .INCLUDES: Engine removal and installation .INCLUDES: Reaming .INCLUDES: Valve adjust and reface	5.1
	1111M9	GUIDE, VALVE :FOR 1 VEHICLE ·· .INCLUDES: Engine removal and installation .INCLUDES: Reaming .INCLUDES: Valve adjust and reface	5.4
+ 3	111115	GASKET, CYLINDER HEAD ·····	4.3

Ref. No.	Part No.	Description	Reqd. QTY WW150 F	Serial No.	Parts catalogue code
1	12010-K36-T00	HEAD ASSY., CYLINDER ·····	1		
2	12204-KWN-P00	GUIDE, VALVE(O.S.) ·····	2		
3	12251-KZY-701	GASKET, CYLINDER HEAD ·····	1		
4	17111-K36-J00	PIPE, IN. ·····	1		
5	17119-KZY-700	INSULATOR, IN. PIPE ·····	1		
6	17120-K36-J00	STAY COMP., HOSE CLAMPER ····	1		
7	17219-K35-V00	CLAMPER, BREATHER TUBE ·····	1		
8	31917-KPH-901	PLUG, SPARK(CPR7EA-9)(NGK) ··	1		
9	36532-K35-V01	SENSOR, OXYGEN ·····	1		
10	37870-KZR-601	SENSOR ASSY., WATER TEMP ····	1		
11	90004-KGF-910	BOLT, STUD, 7X17 ·····	2		
12	90483-KWN-900	WASHER, 8MM ·····	4		
13	91301-KRJ-901	O-RING, 29X2 ·····	2		
14	91307-PLC-004	O-RING, 9.5X1.9(PANASONIC) ··	1		
15	93404-06012-00	BOLT-WASHER, 6X12 ·····	1		
16	94030-08280	NUT, HEX., 8MM ·····	4		
17	94301-10160	DOWEL PIN, 10X16 ·····	2		
18	95701-06014-00	BOLT, FLANGE, 6X14 ·····	2		
19	95701-06040-00	BOLT, FLANGE, 6X40 ·····	2		
20	95701-06095-00	BOLT, FLANGE, 6X95 ·····	2		