FRONT FORK

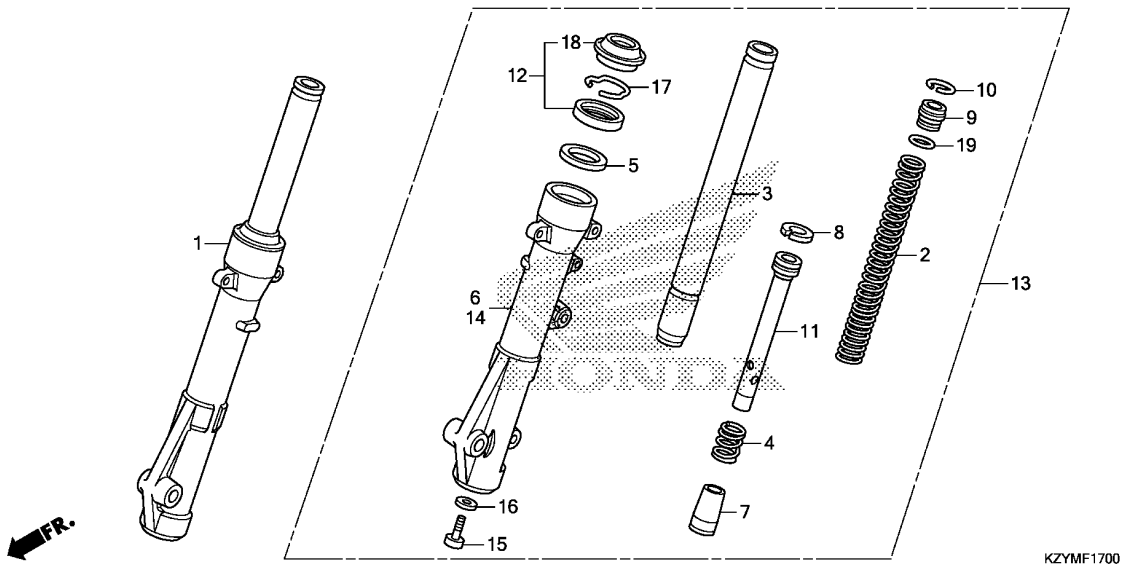

Ref. No.	L.O.N.	(Relative ref. Number) Description	F.R.T.
1	5111C3	FORK ASSY., FRONT :RIGHT -----	0.4
2	5111C5	SPRING, FRONT FORK :LEFT -----	0.6
	5111C6	SPRING, FRONT FORK :RIGHT ----	0.6
	5111C7	SPRING, FRONT FORK :BOTH -----	0.9
3		(4,7,8,11)	
	5111G2	PIPE, FRONT FORK :LEFT -------	0.7
	5111G3	PIPE, FRONT FORK :RIGHT ------	0.7
	5111G4	PIPE, FRONT FORK :BOTH -------	1.1
6		(5)	
	5111D2	CASE, BOTTOM :RIGHT ----------	0.8
12	5111E7	SEAL SET, FRONT FORK :LEFT ---	0.8
	5111E8	SEAL SET, FRONT FORK :RIGHT --	0.8
	5111E9	SEAL SET, FRONT FORK :BOTH ---	1.3
13	5111C2	FORK ASSY., FRONT :LEFT ------	0.4
	5111C4	FORK ASSY., FRONT :BOTH ------	0.5
14		(5)	
	5111D1	CASE, BOTTOM :LEFT ----------	0.8
	5111D3	CASE, BOTTOM :BOTH ----------	1.3

Ref. No.	Part No.	Description	Reqd. QTY WW150 D	Serial No.	Parts catalogue code
1	51400-KWN-711	FORK ASSY., R. FR.(SHOWA) ---	1		
2	51401-KWN-711	SPRING, FR. FORK -----------	2		
3	51410-KWN-711	PIPE COMP., FR. FORK --------	2		
4	51412-GC4-003	SPRING, FR. CUSHION REBOUND -	2		
5	51412-KK4-003	RING, BACK UP --------------	2		
6	51420-KWN-711	CASE COMP., R. FR. BOTTOM (SHOWA)	1		
7	51432-KM7-910	PIECE, OIL LOCK ------------	2		
8	51437-GS3-003	RING, PISTON ---------------	2		
9	51454-KWN-711	SEAT, SPRING UPPER ----------	2		
10	51456-355-003	RING, SUPPORT(SHOWA) --------	2		
11	51470-KWN-901	PIPE, SEAT -----------------	2		
12	51490-KRM-852	SEAL SET, FR. FORK ----------	2		
13	51500-KWN-711	FORK ASSY., L. FR.(SHOWA) ---	1		
14	51520-KWN-711	CASE COMP., L. FR. BOTTOM (SHOWA)	1		
15	90116-383-721	BOLT, SOCKET, 8X27 ----------	2		
16	90544-283-000	WASHER, SPECIAL, 8MM(SHOWA) -	2		
17	90601-354-000	RING, OIL SEAL STOP ---------	2		
18	91254-GAA-003	SEAL, DUST -----------------	2		
19	91356-GBB-003	O-RING ---------------------	2		