F-5 FRONT BRAKE MASTER CYLINDER

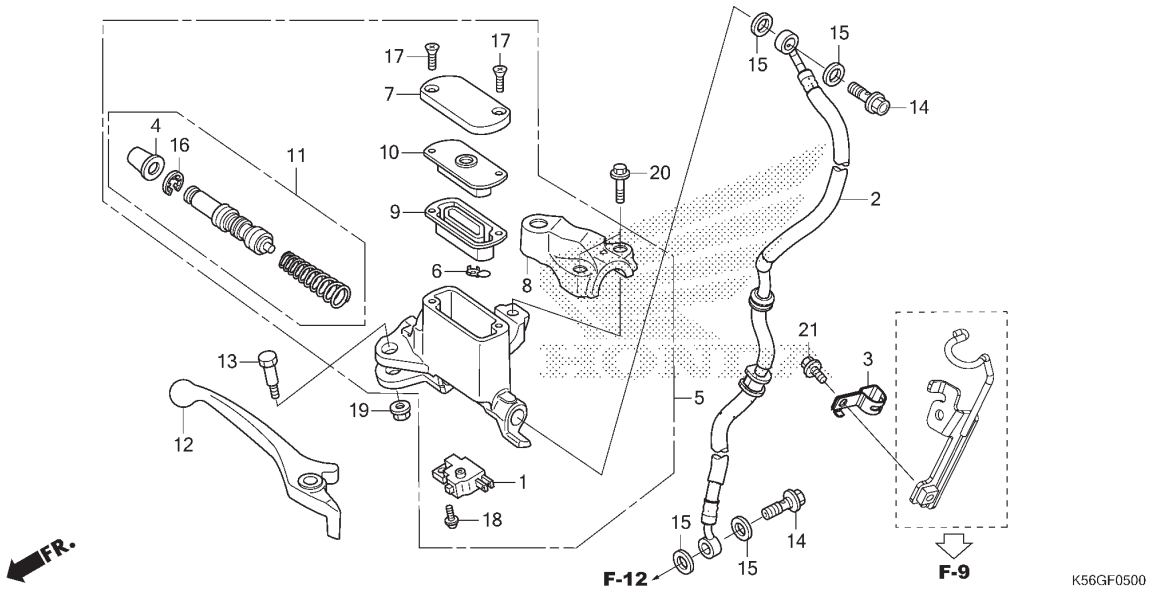

No. Ref.	L.O.N.	(Nomor ref. relatif) Deskripsi	F.R.T.
1	6151B2	SWITCH, FRONT STOP.....	0,4
2	7121A0	HOSE, FRONT BRAKE.....	1,0
		.TERMASUK: Pembuangan angin palsu	
5	71210S	CYLINDER, FRONT BRAKE MASTER...	0,8
		.TERMASUK: Pembuangan angin palsu	
9	7121G6	DIAPHRAGM, FRONT BRAKE MASTER CYLINDER.....	0,1
11	7121G9	PISTON SET, FRONT BRAKE MASTER	0,7
		.TERMASUK: Pembuangan angin palsu	
12	8101C7	LEVER, HANDLE :RIGHT.....	0,3
	8101F5	LEVER, HANDLE :KEDUA-DUANYA....	0,5

No. Ref.	No. Part	Deskripsi	Jumlah SUPRA GTR 150 (FS150F) 2016(G)	No. Seri	Kode Parts Catalog
1	35340-KWB-601	SWITCH ASSY., FR. STOP.....	1		
2	45126-K56-N11	HOSE COMP., FR. BRAKE.....	1		
3	45157-K56-N10	CLAMPER, FR. BRAKE HOSE.....	1		
4	45504-410-004	BOOT COMP.....	1		
5	45510-K03-M01	CYLINDER SUB ASSY., FR. BRAKE MASTER	1		
6	45512-MA6-007	PROTECTOR.....	1		
7	45513-GW0-913	CAP, MASTER CYLINDER.....	1		
8	45517-K03-M61	HOLDER, MIRROR.....	1		
9	45520-GW0-912	DIAPHRAGM.....	1		
10	45521-GW0-913	PLATE, DIAPHRAGM.....	1		
11	45530-K03-M61	CYLINDER SET, MASTER.....	1		
12	53175-KET-920	LEVER, R. STEERING HANDLE.....	1		
13	90114-KGH-900	BOLT, HANDLE LEVER PIVOT.....	1		
14	90145-K03-M60	BOLT, OIL, 10X25.....	2		
15	90545-300-000	WASHER, OIL BOLT.....	4		
16	90651-K03-M61	CIRCLIP, INTERNAL, 18.8.....	1		
17	93600-04012-1G	SCREW, FLAT, 4X12.....	2		
18	93893-04012-17	SCREW-WASHER, 4X12.....	1		
19	94050-0600	NUT, FLANGE, 6MM.....	1		
20	95701-06022-01	BOLT, FLANGE, 6X22.....	2		
21	96001-06012-07	BOLT, FLANGE, 6X12.....	1		