E-20 KICK STARTER SPINDLE

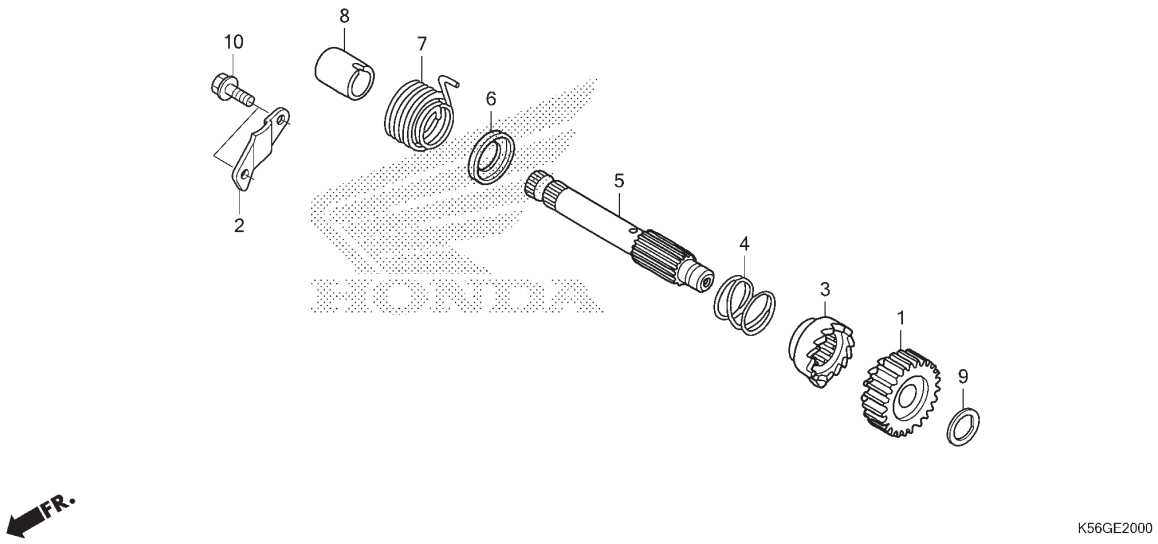

No. Ref.	L.O.N.	(Nomor ref. relatif) Deskripsi	F.R.T.
1		(3,4)	
	1121A0	PINION, KICK STARTER	0,8
5	1121A2	SPINDLE, KICK STARTER	0,8
7	112103	SPRING, KICK STARTER RETURN	0,8

No. Ref.	No. Part	Deskripsi	Jumlah SUPRA GTR 150 (FS150F) 2016(G)	No. Seri	Kode Parts Catalog
1	28211-K56-N00	PINION, KICK STARTER(22T)	1		
2	28215-KGH-901	PLATE, KICK STOPPER	1		
3	28221-K56-N00	RATCHET, STARTER DRIVE	1		
4	28223-KM7-702	SPRING, RATCHET	1		
5	28251-K15-900	SPINDLE, KICK STARTER	1		
6	28254-437-001	SEAT, RATCHET SPRING	1		
7	28261-KGH-901	SPRING, KICK RETURN	1		
8	28282-KGH-901	COLLAR, KICK SPRING	1		
9	90451-KGH-901	WASHER, SPECIAL, 14MM	1		
10	95701-06016-00	BOLT, FLANGE, 6X16	2		