E-23 THROTTLE BODY

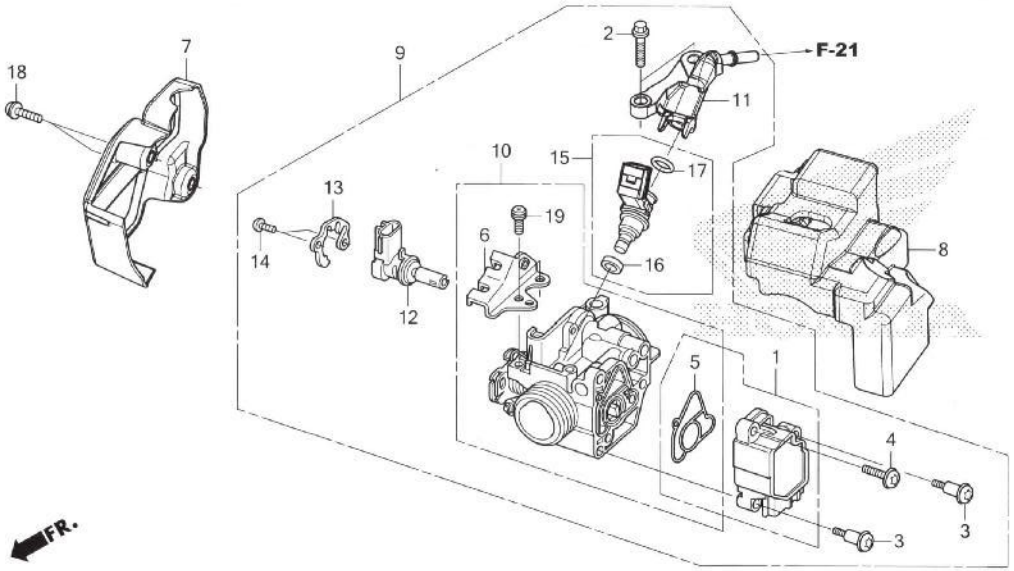

No. Ref.	L.O.N.	(Nomor ref. relatif) Deskripsi	F.R.T.
1		(5)	
	617115	SENSOR, THROTTLE	0,5
9	311132	BODY ASSY., THROTTLE	0,5
10	311130	BODY, THROTTLE	0,5
12	3111N5	VALVE, IDLE AIR CONTROL	0,2
15		(11,16,17)	
	311145	INJECTOR, FUEL	0,5

No. Ref.	No. Part	Deskripsi	Jumlah CRF150L (CRF150L) 2017 (H)	No. Seri	Kode Parts Catalog
1	16060-K84-901	SENSOR SET	1		
2	16080-KPH-701	BOLT, FLANGE, 5X20	2		
3	16081-KYJ-901	SCREW, TORX, 5X8.7	2		
4	16082-KYJ-901	SCREW, TORX, 5X17	1		
5	16083-KTR-941	O-RING, THROTTLE BODY	1		
6	16169-KVS-F01	STAY, WIRE	1		
7	16305-K84-900	COVER, THROTTLE BODY	1		
8	16306-K84-900	RUBBER, THROTTLE BODY	1		
9	16400-K84-901	BODY ASSY., THROTTLE(M2B A)	1		
10	16410-K84-901	BODY SET	1		
11	16422-KRE-G01	JOINT, INJECTOR	1		
12	16430-GFM-902	VALVE ASSY., IDLE AIR CONTROL	1		
13	16432-GFM-901	PLATE, IDLE AIR CONTROL VALVE	1		
14	16433-HN8-A61	SCREW, TORX	2		
15	16450-K35-V01	INJECTOR ASSY., FUEL	1		
16	16472-KPC-D50	RING, SEAL	1		
17	91301-GGL-J01	O-RING, 6.3X2.2	1		
18	93891-05014-18	SCREW-WASHER, 5X14	2		
19	93892-05012-18	SCREW-WASHER, 5X12	2		