F-36 TAILLIGHT

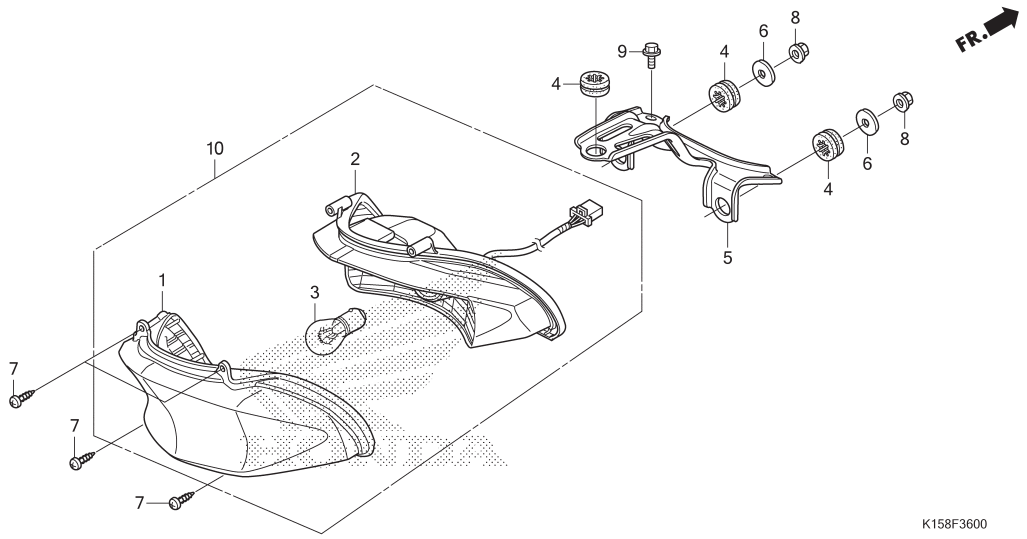

No. Ref.	L.O.N.	(Nomor ref. relatif) Deskripsi	F.R.T.
1	6161E4	LENS, TAILLIGHT	0,1
2	6161E2	BASE, TAILLIGHT	0,6
3	6161G1	BULB, TAILLIGHT	0,1

No. Ref.	No. Part	Deskripsi	Jumlah CB150R 2012	No. Seri	Kode Parts Catalog
1	33702-K15-901	LENS COMP., TAILLIGHT	1		
2	33704-K15-901	BASE COMP., TAILLIGHT	1		
3	34906-KSS-C01	BULB, TAILLIGHT(12V 21/5W) (KO)	1		
4	77209-KAG-900	RUBBER, SEAT STAY MOUNTING	3		
5	77235-K15-900	STAY, TAILLIGHT	1		
6	90563-355-000	WASHER, WHEEL, 6MM	2		
7	93911-24380	SCREW, TAPPING, 4X14	4		
8	94050-0600	NUT, FLANGE, 6MM	2		
9	95701-06012-08	BOLT, FLANGE, 6X12	2		
10	33701-K15-901	UNIT TAILLIGHT	1		