F-29 PEDAL

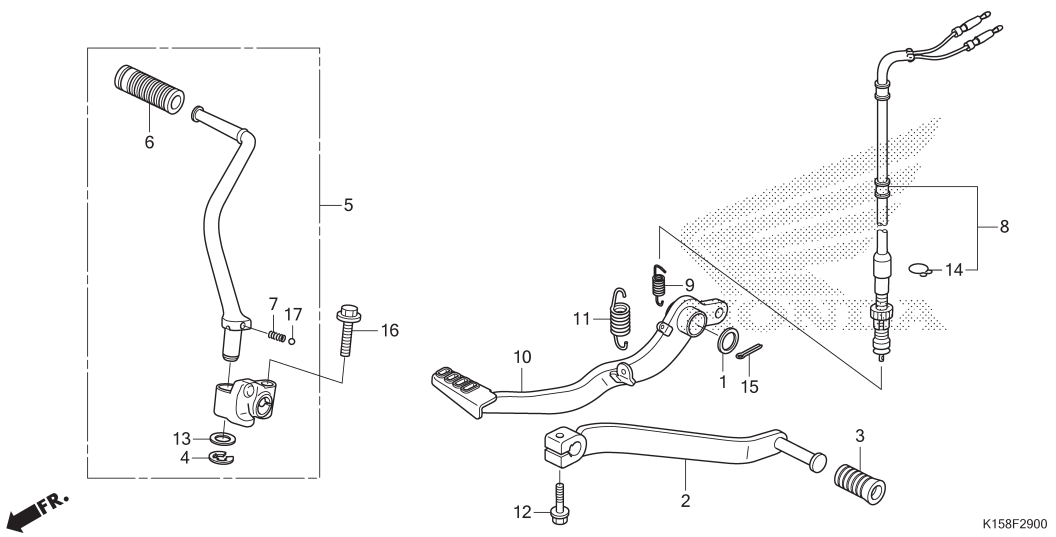

No. Ref.	L.O.N.	(Nomor ref. relatif) Deskripsi	F.R.T.
2	4101A1	PEDAL, GEAR CHANGE	0,1
5	112107	ARM, KICK STARTER	0,1
8	6151B5	SWITCH, REAR STOP :SISI PEDAL	0,4
10	810160	PEDAL, REAR BRAKE	0,2

No. Ref.	No. Part	Deskripsi	Jumlah CB150R 2012	No. Seri	Kode Parts Catalog
1	16502-880-000	WASHER, SWITCH BOSS	1		
2	24701-K15-900	PEDAL, GEAR CHANGE	1		
3	24781-KR3-770	RUBBER, GEAR CHANGE PEDAL	1		
4	28293-333-000	CLIP, KICK STARTER ARM	1		
5	28300-K15-900	ARM ASSY., KICK STARTER	1		
6	28311-K15-900	RUBBER, KICK STARTER	1		
7	28333-KK0-000	SPRING, KICK STARTER	1		
8	35350-K15-901	SWITCH ASSY., RR. STOP	1		
9	35357-HP0-A00	SPRING, STOP SWITCH	1		
10	46500-K15-900	PEDAL COMP., BRAKE	1		
11	46514-KZ4-J00	SPRING, BRAKE PEDAL	1		
12	90102-MN1-670	BOLT, FLANGE, 6X20	1		
13	90505-KRM-860	WASHER, 15.5X22	1		
14	90601-KAF-003	CLIP, SWITCH COVER	1		
15	94201-25220	PIN, SPLIT, 2.5X22	1		
16	95701-08035-07	BOLT, FLANGE, 8X35	1		
17	96211-08000	BALL, STEEL, #8(1/4)	1		