F-2 METER

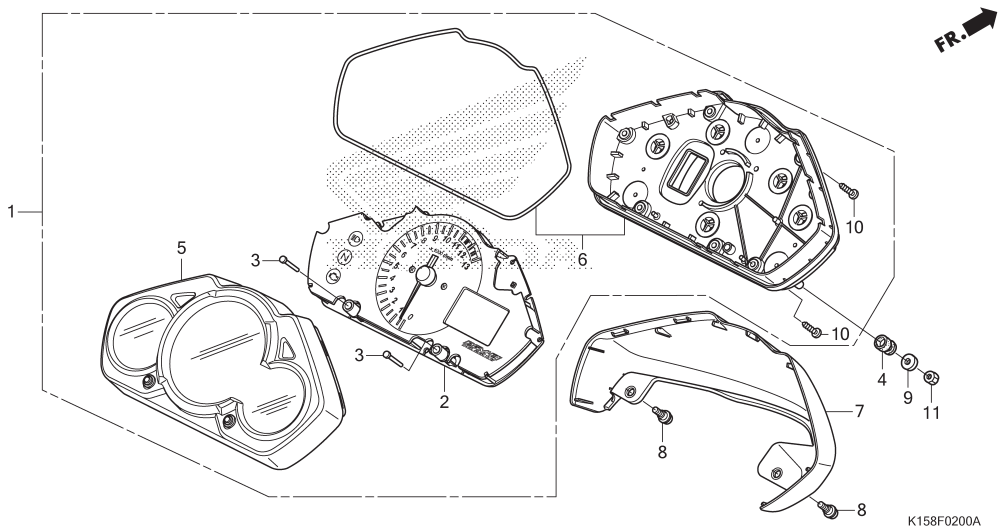

No. Ref.	L.O.N.	(Nomor ref. relatif) Deskripsi	F.R.T.
1	8121A1	METER ASSY., COMBINATION	0,5
2	8121A2	METER, COMBINATION	0,6
5	8121B4	CASE, METER :ATAS	0,5
6	8121B5	CASE, METER :BAWAH	0,5
7	8121E3	COVER, METER	0,4

No. Ref.	No. Part	Deskripsi	Jumlah CB150R 2012	No. Seri	Kode Parts Catalog
1	37100-K15-901	METER ASSY., COMBINATION(KP)	1		
2	37200-K15-901	METER ASSY., SPEED & TACHO & FUEL	1		
3	37202-K15-901	ROD, SWITCH EXTENSION	2		
4	37215-KCJ-691	RUBBER, METER SETTING	3		
5	37300-K15-901	CASE ASSY., UPPER	1		
6	37400-K15-901	CASE ASSY., UNDER	1		
7	61304-K15-900	COVER, METER	1		
8	90101-GE0-001	SCREW, HINGE PATCH	2		
9	90525-030-000	WASHER B, HANDLE HOLDER SETTING	3		
10	93903-22420	SCREW, TAPPING, 3X16	10		
11	94001-06000-0S	NUT, HEX., 6MM	3		