F-25

FRAME BODY/UTILITY BOX

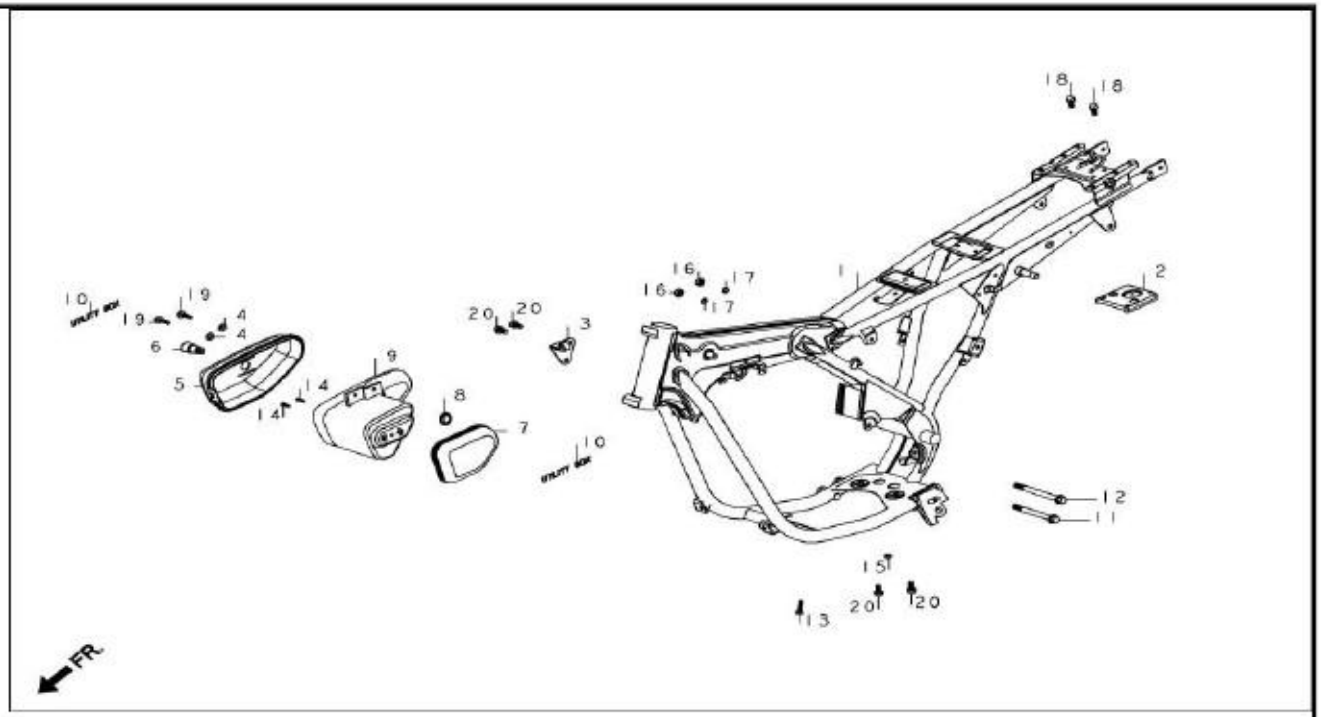

Service Item	F.R.T.
BODY COMP., FRAME 'NH-1'	5.0
UTILITY BOX	--
(INC. RELATIVE PART)	--

BOM Of Group Number: F-25 Model :: Splendor (Dec, 1993)

Ref No.	Part Number	Description	Req.
1	50100-KCC-900	BODY COMP., FRAME 'NH-1'	1
2	50145-KCC-900	BRACKET, RESISTOR	1
3	50211-KCC-900	PLATE, ENGINE HANGER	1
4	61107-KK6-000	WASHER, 6MM	2
5	83512-KCC-900	COVER, 'R' UTILITY BOX	1
6	83513-KCC-900	LATCH, UTILITY BOX COVER	1
7	83510-KCC-940	UTILITY BOX COMP.	1
8	83516-KCC-900	GROMMET , UTILITY BOX	1
9	83510-KCC-940	UTILITY BOX COMP.	1
10	83518-KCC-900	MARK, UTILITY BOX	2
11	90116-KCC-900	BOLT FLANGE, 8 X 97	1
12	90117-KCC-900	BOLT, FLANGE, 8 X 110	1
13	92025-06025-0H	BOLT, HEX., 6 X 25	1
14	93913-24320	SCREW TAPPING, 4 X 14	2
15	94001-06000-0S	NUT, HEX., 6 MM	1
16	94030-08000-0S	NUT, HEX., 8 MM	2
17	94111-08000	WASHER, SPRING, 8MM	2
18	95701-06010-07	BOLT, FLANGE, 6 X 10	2
19	95701-06018-08	BOLT, FLANGE, 6 X 18	2
20	95701-08016-00	BOLT, FLANGE, 8X16	4