F - 14

Fuel Tank

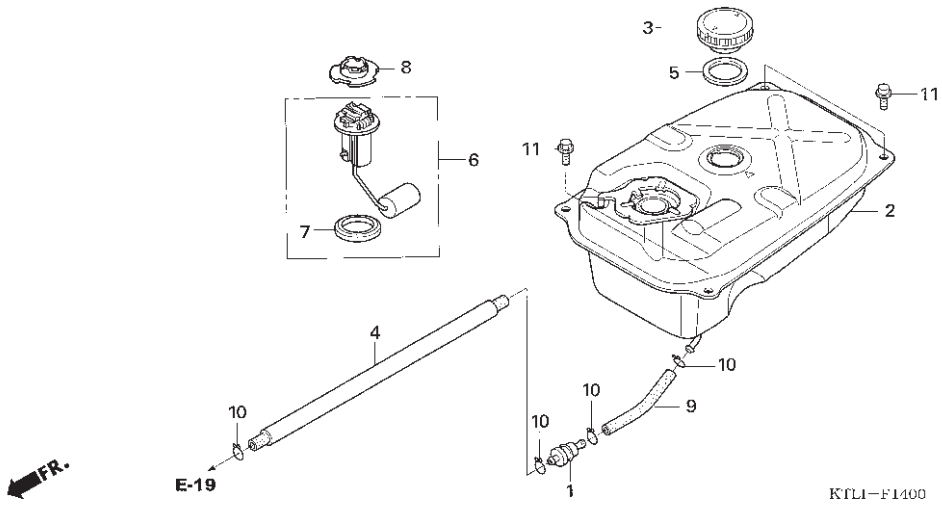

	Service item	F.R.T.
1	STRAINER, FUEL.....	0.5
2	TANK, FUEL.....	0.6
6	METER, FUEL.....	0.2

No.	Part Number	Description	QTY ANF100 / ANF100D	Notes
1	16910-KFM-902	STRAINER COMP., FUEL	1	
2	17510-KTM-850	TANK COMP., FUEL	1	
3	17620-KEV-900	CAP, FUEL FILLER	1	
4	17631-KTL-850	TUBE, FUEL, 5.3X600	1	
5	17631-096-701	PACKING, FUEL FILLER CAP	1	
6	37010-KTL-740	FUEL UNIT SET	1	
7	37801-GA7-700	PACKING, BASE	1	
8	37802-KTL-740	RETAINER, FUEL UNIT	1	
9	95001-55040-40	TUBE, FUEL, 5.3X40 (95001-55001-60M)	1	
10	95002-02100	CLIP, TUBE (B10)	4	
11	95701-06012-00	BOLT, FLANGE, 6X12	4	