Battery

The battery is located in a compartment under the rear fender cover.

UNDER REAR FENDER COVER

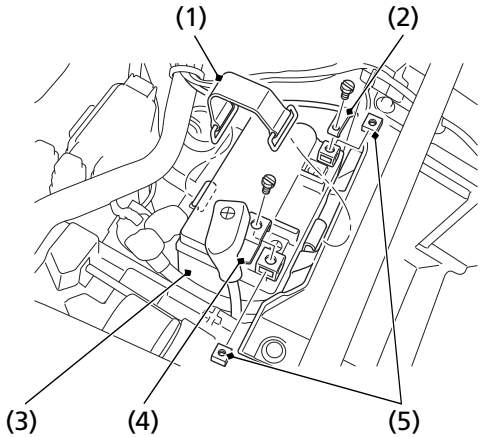

(1) rubber band
(2) negative (–) terminal lead
(3) battery
(4) positive (+) terminal lead
(5) terminal nuts

Removal

1. Make sure the ignition switch is OFF (○).
2. Remove the seat (page 124).
3. Remove the rear fender cover (page 125).
4. Release the rings and remove the rubber band (1).
5. Disconnect the negative (–) terminal lead (2) from the battery (3) first, then disconnect the positive (+) terminal lead (4).
6. Remove the battery taking care not to drop the terminal nuts (5).

(cont'd)