# Battery

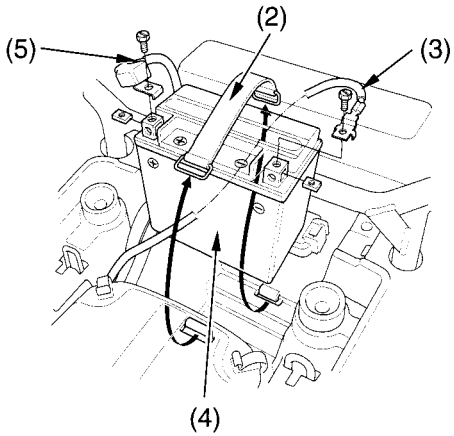


(2) rubber band
(3) negative (−) terminal lead
(4) battery
(5) positive (+) terminal lead

4. Release the rings and remove the rubber band (2).
5. Disconnect the negative (−) terminal lead (3) from the battery (4) first, then disconnect the positive (+) terminal lead (5).
6. Remove the battery.
7. Charge the battery (see following section), unless you have been riding regularly.
8. Store your battery in an easy-to-reach location off the floor, in an area protected from freezing temperature and direct sunlight.
9. Clean the battery box after removing the battery for storage. Dry the battery box and, if paint is missing, re-paint the area.
10. Slow charge the battery (see following section) once every 30 days.

Installation

1. Install in the reverse order of removal.
2. Check all bolts and other fasteners are secure.