## REAR FINAL GEAR CASE OIL

Change the oil in the rear final gear case when specified by the Maintenance Schedule. Change the oil with the final gear case warm, and the FOURTRAX on level ground to assure complete and rapid draining.

To change the rear final gear case oil:

1. To drain the oil, first place an oil drain pan under the oil drain plug (Fig. 4-14).
2. Remove the oil filler cap (1) and the drain plug (2).
3. After the oil has completely drained, reinstall the drain plug.
   Drain Plug Torque:
   9 lbf·ft (12 N·m , 1.2 kgf·m)
4. Fill the gear case with the recommended oil.

   Rear final gear case oil:
   2.9 US oz (85 $cm^3$ , 3.0 Imp oz)

   Recommended oil:
   Honda shaft drive oil or equivalent HYPOID GEAR OIL SAE 80

   Remove the oil level check bolt (3).

   Make sure the oil level reaches the oil level check hole (4).

5. Install the oil filler cap and oil level check bolt.

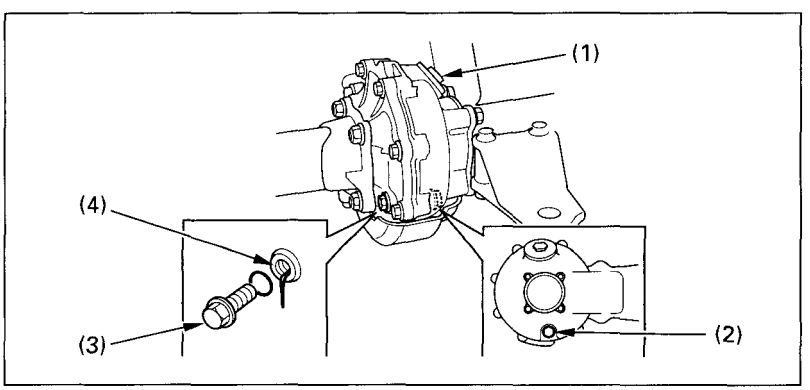


Fig. 4-14 (1) Oil filler cap (2) Drain plug (3) Oil level check bolt (4) Lower edge of oil level check hole